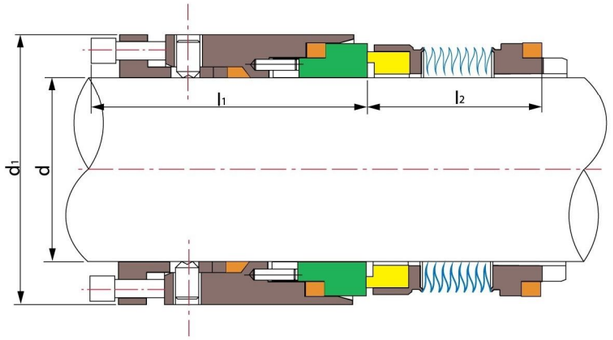

TSMB-J04(TS 604)

Operating Limits

Pressure: ≤2MPa(single wave slice)
≤6.9MPa(double wave slice)
Speed: ≤25m/s
Temperature: -75˚C～+425˚C

- Rotary Ring(SiC/Carbon/TC)
- Stationary Ring(SiC/Carbon)
- Secondary Seal(Flexible Carbon)
- Metal Bellows(SUS316L/AM350/Inconel718 /Titanium/Hastelloy-C/Alloy-20)
- Other Parts(SUS304/SUS316/Titanium/Hastelloy-C)

Shaft (inches)	d	d_1	l_1	l_2
1.000	1.000	[illegible]	[illegible]	[illegible]
[illegible]	[illegible]	[illegible]	[illegible]	[illegible]
2.375	2.375	3.437	2.186	1.379
2.500	2.500	3.562	2.184	1.410
2.625	2.625	3.687	2.250	1.443
2.750	2.750	3.937	2.250	1.608
2.875	2.875	4.062	2.281	1.608
3.000	3.000	4.187	2.250	1.608
3.125	3.125	4.312	2.250	1.608
3.250	3.250	4.437	2.219	1.608
3.375	3.375	4.562	2.282	1.608
3.500	3.500	4.687	2.373	1.650
3.625	3.625	4.812	2.375	1.650
3.750	3.750	4.937	2.375	1.650
3.875	3.875	5.062	2.375	1.650

Shaft (mm)	d	d_1	l_1	l_2
[illegible]	[illegible]	[illegible]	[illegible]	[illegible]
50.00	50	74.60	52.32	32.64
55.00	55	80.95	55.42	33.43
60.00	60	87.30	55.52	35.03
65.00	65	90.47	55.47	35.81
70.00	70	100.00	57.15	40.84
75.00	75	106.35	57.15	40.84
80.00	80	109.52	57.15	40.84
85.00	85	115.87	57.96	40.84
90.00	90	119.05	60.27	41.91
95.00	95	125.40	60.33	41.91
100.00	100	128.57	60.33	41.91

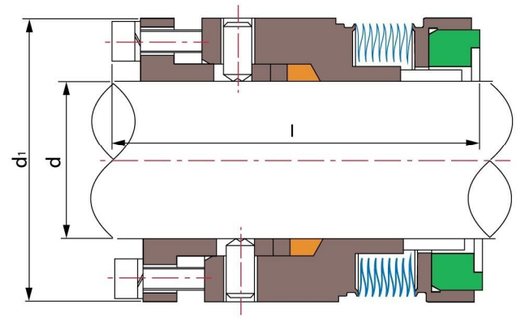

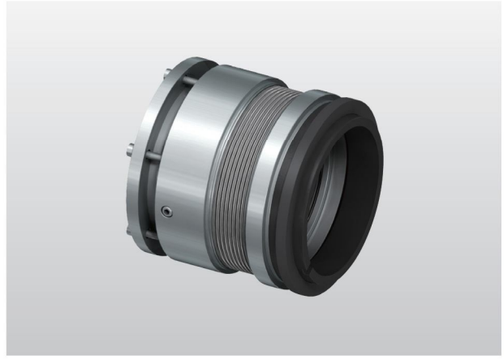

TSMB-J05(TS 606)

Operating Limits

Pressure: ≤ 2MPa(single wave slice)
≤6.9MPa(double wave slice)
Speed: ≤ 25m/s
Temperature: -75˚C～+425˚C

- Rotary Ring(SiC/Carbon/TC)
- Stationary Ring(SiC/TC)
- Secondary Seal(Flexible Carbon)
- Metal Bellows(SUS316L/AM350/Inconel718 /Titanium/Hastelloy-C/Alloy-20)
- Other Parts(SUS304/SUS316/Titanium/Hastelloy-C)

Shaft (inches)	d	d_1	l
0.750	0.750	1.625	2.312
[illegible]	[illegible]	[illegible]	[illegible]
2.250	2.250	3.250	2.750
2.375	2.375	3.375	2.781
2.500	2.500	3.500	2.781
2.625	2.625	3.687	2.875
2.750	2.750	3.812	3.000
2.875	2.875	4.000	3.000
3.000	3.000	4.125	3.000
3.125	3.125	4.250	3.000
3.250	3.250	4.375	3.000
3.375	3.375	4.500	3.000
3.500	3.500	4.625	3.000
3.625	3.625	4.750	3.000
3.750	3.750	4.875	3.000

Shaft (mm)	d	d_1	l
20	20	41.28	58.72
[illegible]	[illegible]	[illegible]	[illegible]
50	50	73.03	65.07
55	55	76.20	65.07
60	60	85.73	70.64
65	65	88.90	70.64
70	70	96.82	76.20
75	75	104.78	76.20
80	80	107.95	76.20
85	85	114.30	76.20
90	90	117.48	76.20
95	95	123.83	76.20
100	100	130.18	76.20