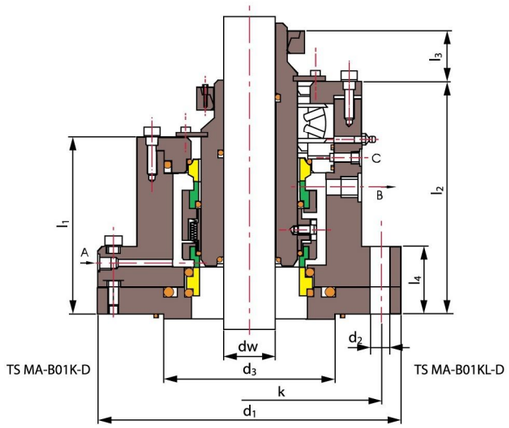

TSMA-B01

Operating Limits

Pressure: ≤2.5MPa/≤4MPa
Speed: ≤5m/s
Temperature: -30˚C ~+200˚C /-80˚C ~+350˚C

- Rotary Ring(SiC/Carbon/TC)
- Stationary Ring(SiC/TC/Ceramic)
- Secondary Seal(VITON/Encapsulated Ring/PTFE)
- Other Parts(SUS304/SUS316/Titanium/Hastelloy-C)

dw(mm)	d_1	N×d_2	d_3	k	l_1	l_2	l_3	l_4
40	200	6x18	80	170	115	170	35	45
50	230	8x18	100	200	120	185	35	55
60	255	8x18	120	225	140	210	35	60
80	295	8x23	145	260	145	230	44	60
100	315	8x23	170	280	160	245	44	65
120	345	8x23	190	310	160	250	50	65
140	380	12x23	215	345	165	265	50	65
160	440	12x27	240	395	185	300	50	75
180	475	12x27	260	430	185	310	55	75
200	465	12x27	290	420	190	290	55	75

TSMA-B02

Operating Limits

Pressure: ≤0.6MPa/≤1.6MPa
Speed: ≤2m/s/≤5m/s
Temperature: -30˚C ~+200˚C /-80˚C ~+250˚C

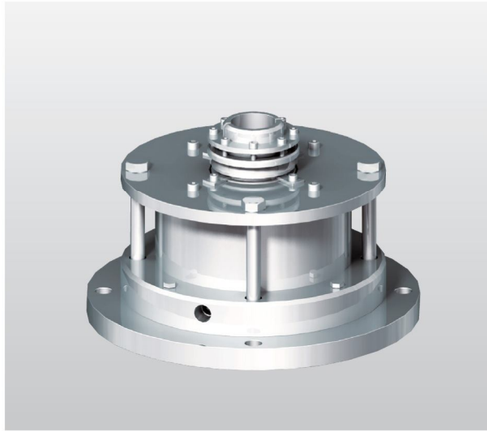

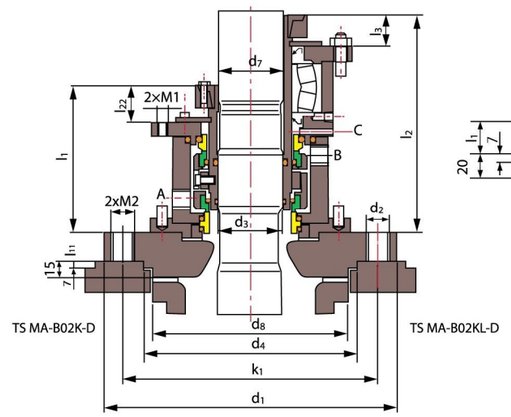

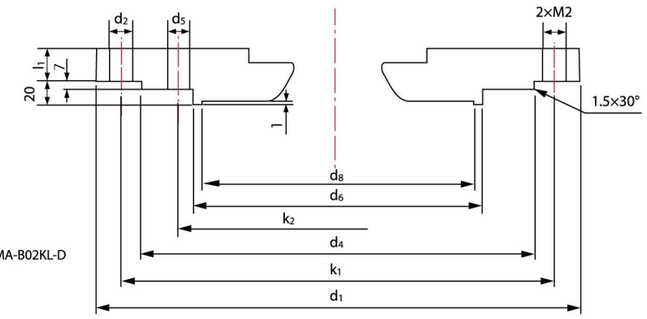

- Rotary Ring(SiC/Carbon/TC)
- Stationary Ring(SiC/TC/Ceramic)
- Secondary Seal(VITON/Encapsulated Ring/PTFE)
- Other Parts(SUS304/SUS316/Titanium/Hastelloy-C)

d_3(mm)	d_7	d_1	N×d_2	d_4	N×d_5	d_6	d_8	k_1	k_2	l_1	l_2	l_{11}	l_{22}	l_3	l_4	l_5	M_1	M_2	A,B
40	38	175	4x18	110	\	\	102	145	\	142	184	25	35	28	50	50	M12	M16	G3/8
50	48	240	8x18	176	\	\	138	210	\	147	195	25	40	28	50	50	M12	M16	G3/8
60	58	275	8x22	204	\	\	188	240	\	158	203	25	42	28	50	60	M12	M20	G3/8
80	78	305	8x22	234	\	\	212	270	\	170	240	30	45	34	60	60	M16	M20	G1/2
100	98	395	12x22	313	\	\	268	350	\	177	240	30	52	34	60	60	M16	M20	G1/2
100	98	395	12x22	313	\	\	268	350	\	177	240	30	52	34	60	60	M16	M20	G1/2
125	120	505	4x22	422	12x22	320	306	460	350	208	266	30	75	40	60	80	M20	M20	G1/2
140	135	505	4x22	422	12x22	320	306	460	350	223	282	30	79	40	60	80	M20	M20	G1/2
160	150	565	4x22	422	12x22	320	306	460	350	228	282	30	77	40	60	85	M20	M20	G1/2
160	150	505	4x22	422	12x22	320	306	460	350	228	282	30	77	40	60	85	M20	M20	G1/2
160	150	565	4x26	474	12x22	370	356	515	400	228	282	30	77	40	60	85	M20	M20	G1/2